BREAK & DEBURR ALL SHARP EDGES

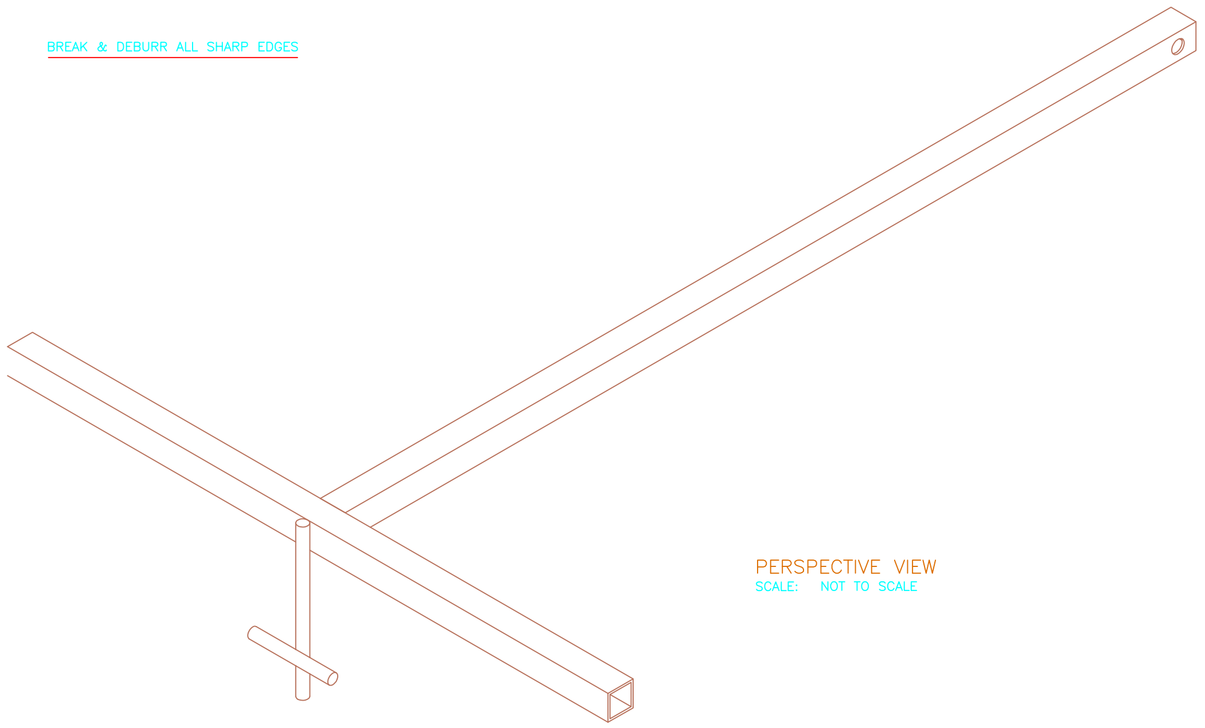

PERSPECTIVE VIEW
SCALE: NOT TO SCALE

NOTES:

1. WELD: USE STD WORKSHOP PRACTICES.
2. 14x HANDLES TO BE PRODUCED.

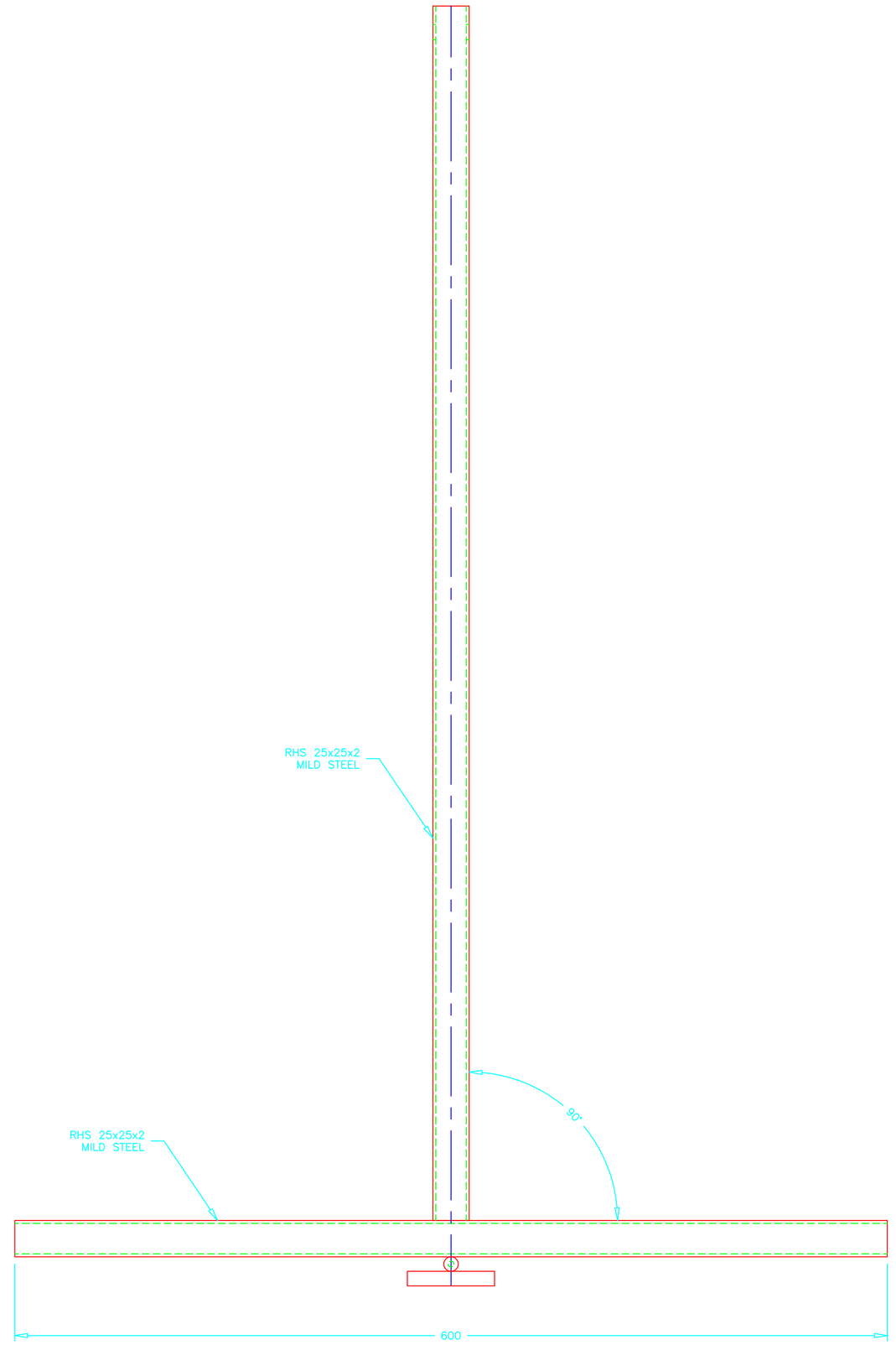

TOP VIEW
SCALE: 1:2.5

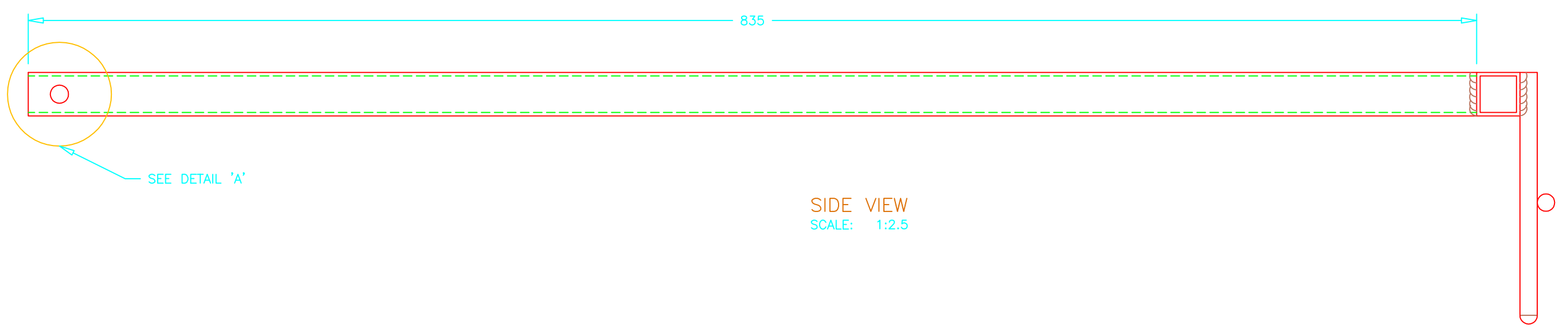

SIDE VIEW
SCALE: 1:2.5

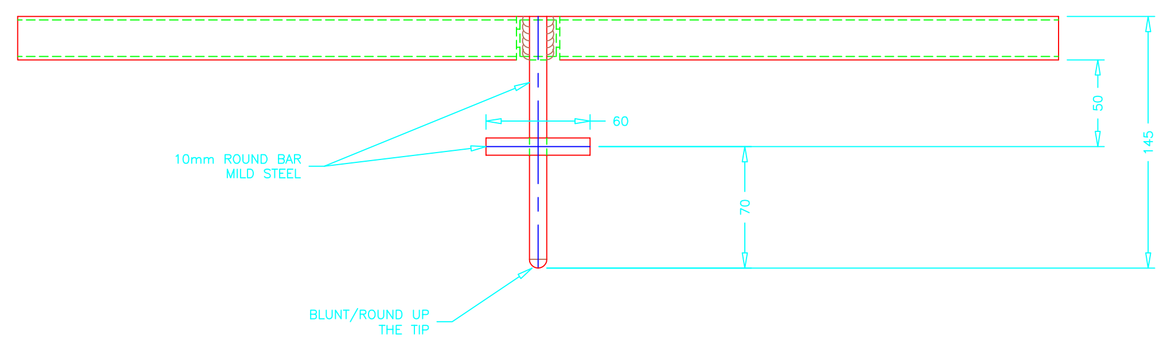

FRONT VIEW
SCALE: 1:2.5

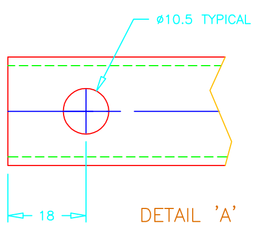

DETAIL 'A'
SCALE: 1:1

REV	DATE	DETAILS	DRAWN	APPROVED
A	02-02-13	FIRST ISSUE FOR CONSTRUCTION	BERTRAND B.	–
P2	25-11-12	PRELIMINARY ISSUE, NOT FOR CONSTRUCTION – SPIKE REDUCED IN SIZE	BERTRAND B.	–
P1	17-11-12	PRELIMINARY ISSUE, NOT FOR CONSTRUCTION – FOR TENDER AND INTERNAL DISCUSSION	BERTRAND B.	–

AUCKLAND ARCHERY CLUB INC.

DO NOT SCALE DRAWING
ALL DIMENSIONS IN mm
X ±1
.X ±0.5
.XX ±0.25
ANGLES ±0.5
REFER TO DESIGNER FOR MORE INFO

DWG/JOB No: 100-0002

TITLE: AUCKLAND ARCHERY CLUB INC.

DESCRIPTION: 'DANAGE' TARGET FRAME T-HANDLE ASSEMBLY

MATERIAL: MILD STEEL

FINISH: GALVANISED, AFTER WELDING

WEIGHT	SCALE	SHEETS	
2.3 kg	1:2.5	1/1	A1

THIS DRAWING IS THE PROPERTY OF BERTRAND BOURGEOIS AND MUST NOT BE REPRODUCED OR USED FOR ANY PURPOSE, OTHER THAN IN CONJUNCTION WITH THE PROJECT OR DESIGN FOR WHICH IT WAS DRAWN, WITHOUT SOUTHERN SPARS' PRIOR WRITTEN CONSENT. COPYRIGHT : BERTRAND BOURGEOIS